Questionnaire about slurry pump spares

Pompa Worthington tipo 3R111

Throat Bushing

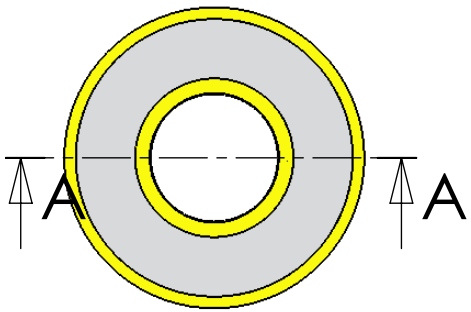

Suction side liner

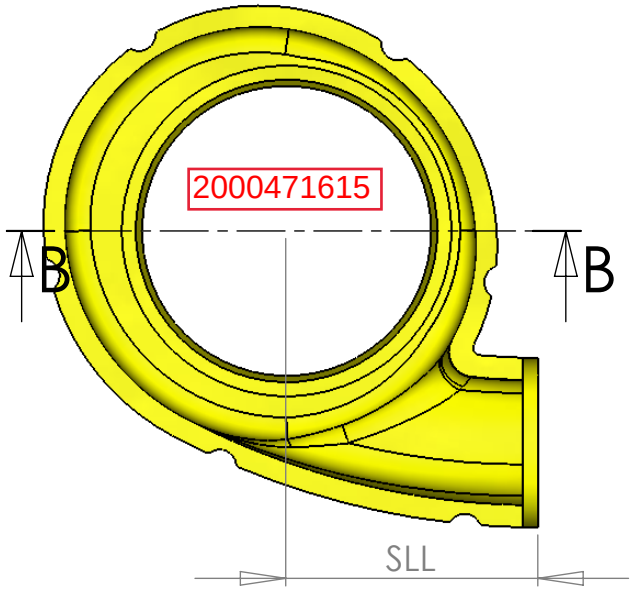

Impeller

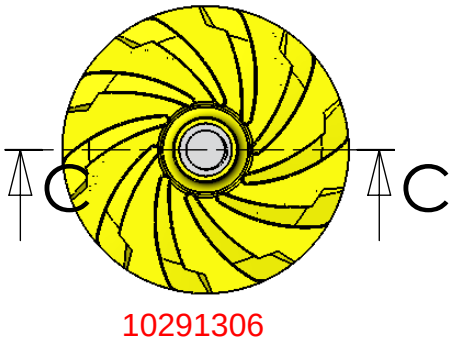

Engine side liner

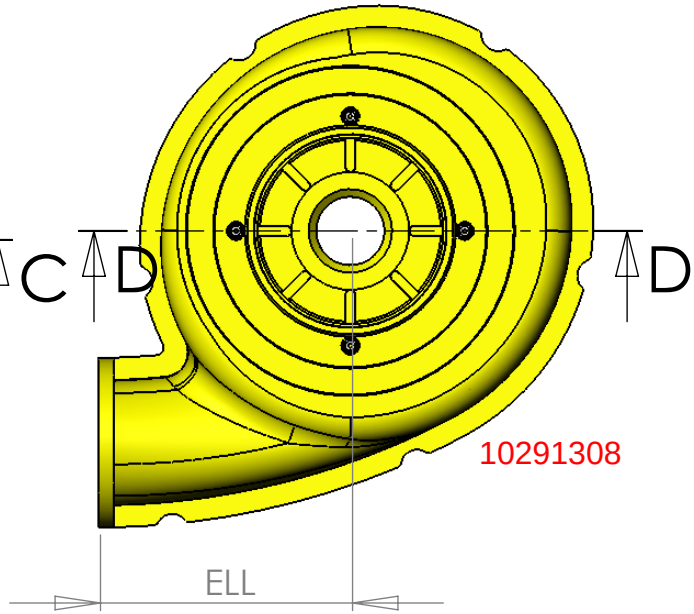

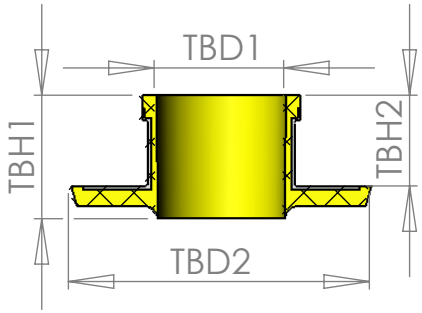

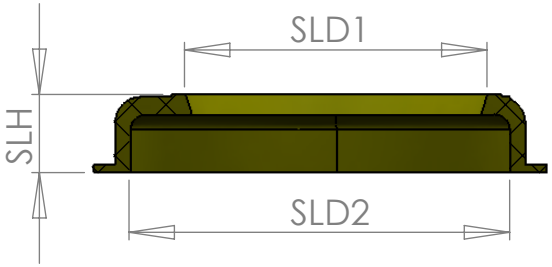

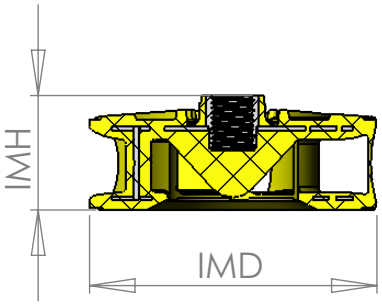

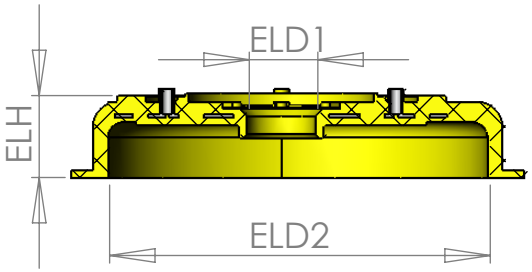

Dimension		Dimension	
TBD1	100	SLL	265
TBD2	--------	IMH	95
TBH1	55	IMD	280
TBH2	40	ELH	65
SLH	70	ELD1	105
SLD1	-------	ELD2	340
SLD2	340	ELL	265

if the suction side liner is inclusive of the throat bushing please indicate the dimensions TBH2 as the suction neck height