type	A	AB	AC	AD	B	C	D	DA	E	EA	F	FA	GA	GC	H	HD	K	L	LA	LC	M	N	P	R	S	T	G.ZO LD	GTB9.06 LE G.ZO	GTB9.06 L G.ZE
71	112	140	139	104	90	45	14	14	30	30	5	5	16	16	71	------	7	305	12 9	338	FT85 130	70 110	105 160	0	M6 10	2,5 3,5	------	------	364
90	140	175	177	153	125	56	24	24	50	50	8	8	27	27	90	212	10	414	15 12	467	FT115 165	95 130	140 200	0	M8 12	3 3,5	554	554	466
100	160	200	195	161	140	63	28	24	60	50	8	8	31	27	100	231	12	472	17 11	535	FT130 215	110 180	160 250	0	M8 14,5	3,5 4	602	602	507
112	190	235	219	175	140	70	28	28	60	60	8	8	31	31	112	255	12	478	16 14	541	FT130 215	110 180	160 250	0	M8 14,5	3,5 4	613	613	518
132	216	260	258	195	178	89	38	38	80	80	10	10	41	41	132	306	12	598	23 12	681	FT165 265	130 230	200 300	0	M10 14,5	3,5 4	718	718	718
																													RDC30
160M,L	254	318	310	232	254	108	42	42	110	110	12	12	45	45	160	360	14,5	798	13	911	300	250	350	0	18,5	5	903	903	903
180M	279	360	348	252	279	121	48	48	110	110	14	14	51,5	51,5	180	399	14,5	873	13	986	300	250	350	0	18,5	5	1003	1003	1003
200S,M,L	318	400	388	302	305	133	55	55	110	110	16	16	59	59	200	446	18,5	960	15	1073	350	300	400	0	18,5	5	1072	1072	1072
225S,M	356	436	436	322	311	149	60	60	140	140	18	18	64	64	225	504	18,5	958	16	1101	400	350	450	0	18,5	5	1086	1086	1036
250S,M	406	485	480	350	349	168	65	65	140	140	18	18	69	69	250	563	24	1049	18	1194	500	450	550	0	18,5	5	1179	1179	1149
250L																		1139		1284							1269	1269	1239
280S,M	457	536	540	385	419	190	75	75	140	140	20	20	79,5	79,5	280	621	24	1260	18	1405	500	450	550	0	18,5	5	1401	1401	1360
280L																		1320		1465							1461	1461	1420
315S,M	508	620	600	435	457	216	80	80	170	170	22	22	85	85	315	760	28	1407	22	1582	600	550	660	0	24	6	1517	1517	1507
315L																		1477		1652							1587	1587	1577

GNFZE
IM B35
IM B34

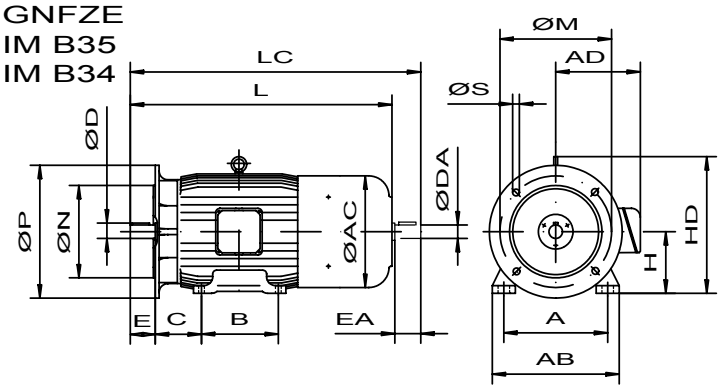

GNFZE
IM B5
IM B14

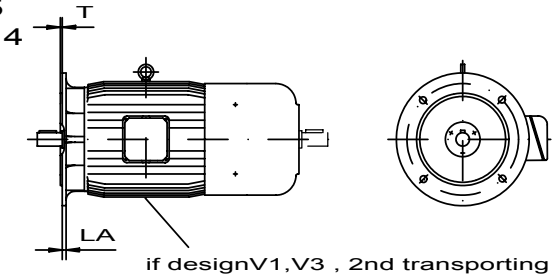

if designV1,V3 , 2nd transporting ring

GNZE
IM B3

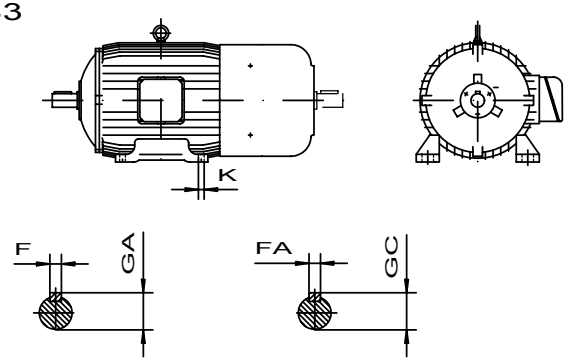

GN.ZO

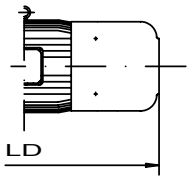

with axial speed indepenaent surface fan

measure	ISO-fit	diameter
D , DA	j6	9mm - 28mm
D , DA	k6	38mm - 48mm
D , DA	m6	above 48mm
N	j6	to 250mm
N	h6	above 250mm

fit feather to DIN 6885 T1
terminal box rotating about 4*90°
second shaft-extension only after special order

GN.ZO

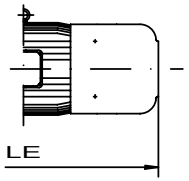

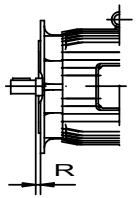

with axial speed indepenaent surface fan
and build-in Tachometer GTB 9.06

measure	allowable variations	distance
A , B	+/-1,0	
H	-0,5	to 250mm
H	-1,0	above 250mm
C	+/-1,0	

shaft extension EN 50347
flange to EN 50347
pictorial presentation not binding

type 71: terminal box=above
Typ 71 - 100 without transporting ring
8 flange-bohre-holes when mounting flange M≥400

	date	name
revised	10.09.10	Hein.
checked	13.09.10	Lange
norm		

IEC DC-motor

type: GN.Z. 71-315
protection: IP44-IP55
cooling: IC 411 , IC 416

WINKELMANN
Spezialfabrik für Elektro-Motoren

M 100910-3E

source | comp. f.: M 030210-3 | replace d.: