MINIATURE 5VDC OUTPUT PRESSURE TRANSDUCER

ETM-500-375(M)

- Smallest High Performance Amplified Transducer Worldwide
- Rugged Design Provides Compatibility With Most Corrosive and Conductive Media
- High Over Pressure Capability
- Designed and Engineered For Severe Environmental Conditions
- Silicon on Silicon Integrated Sensor **VIS**®

The ETM-500-375M is one of the newest generation of Kulite standard smallest miniature amplified transducer currently available. The metal flush diaphragm is used as a force collector. Force is transferred to a solid-state piezoresistive sensing element via thin intervening film of non-compressible silicon oil. This sensing sub-assembly is protected from mechanical damage by a protective screen, which has been shown to have minimal influence of the frequency response of the sensor. Incorporation of a Kulite proprietary electronics module within the main body of this product allows for operation from an unregulated power supply ranging from 8 to 16 VDC.

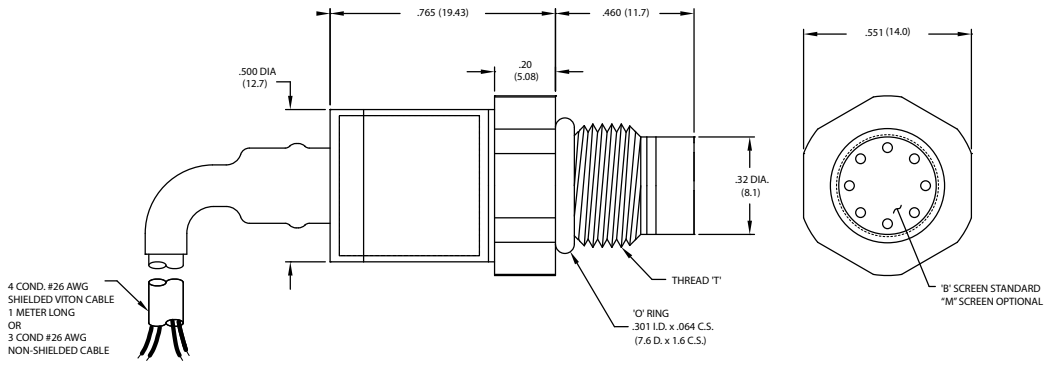

P/N	"T"
375	3/8-24 UNJF-3A
375M	M 10 x 1

WIRING	
COLOR	DESIGNATION
RED	+ INPUT
BLACK	- INPUT
GREEN	+ OUTPUT
WHITE	NO CONNECTION

INPUT	Pressure Range	10 15 80 140 210 275 BAR 145 218 1160 2031 3046 3989 PSI
	Operational Mode	Absolute, Sealed Gage
	Over Pressure	2 Times Rated Pressure (<500 PSI) (35 BAR) 1.5 x Rated Pressure ≥ 500 PSI (35 BAR)
	Burst Pressure	3 Times Rated Pressure
	Pressure Media	Most Conductive Liquids and Gases - Please Consult Factory (All Media May Not Be Suitable With O-Ring Supplied)
	Rated Electrical Excitation	12 ± 4 VDC
	Maximum Electrical Current	25 mA (Max.)
OUTPUT	Output Impedance	< 25 Ohms (Typ.)
	Full Scale Reading	4.5V ± 75 mV
	Bandwidth (-3dB)	DC to 5 KHz
	Residual Unbalance	500 mV ± 75 mV
	Combined Non-Linearity, Hysteresis and Repeatability	± 0.1% FSO BFSL (Typ.), ± 0.25% FSO (Max.)
	Resolution	Infinitesimal
	Acceleration Sensitivity % FS/g Perpendicular	$1.4x10^{-4}$ $1.1x10^{-4}$ $3.4x10^{-5}$ $2.2x10^{-5}$ $1.5x10^{-5}$ $1.3x10^{-5}$
	Insulation Resistance	> 100 Megohm Min. @ 50 VDC
ENVIRONMENTAL	Operating Temperature Range	-40°F to 302°F (-40°C to 150°C)
	Compensated Temperature Range	68°F to 257°F (20°C to 125°C)
	Zero Shift	± 1.4% FSO / 100°F (± 2.5% FSO / 100°C) (Typ.)
	Sensitivity Shift	± 1.4% FSO / 100°F (± 2.5% FSO / 100°C) (Typ.)
	Linear Vibration	100g Peak, Sine up to 5000 Hz
	Mechanical Shock	100g Half Sine Wave 11 msec. Duration
PHYSICAL	Electrical Connection	3 Cond #26 AWG Non-Shielded Cable or 4 Cond #26 AWG Shielded Cable 1 Meter Long
	Weight	10 Grams (Max.) Excluding Cable
	Pressure Sensing Principle	Fully Active Four Arm Wheatstone Bridge Dielectrically Isolated Silicon on Silicon Patented Leadless Technology
	Mounting Torque	70 Inch-Pounds (Max.) 8Nm

Note: Custom pressure ranges, accuracies and mechanical configurations available. Dimensions are in inches. Dimensions in parenthesis are in millimeters. All dimensions nominal. (B) Continuous development and refinement of our products may result in specification changes without notice.
Kulite miniature pressure transducers are intended for use in test and research and development programs and are not necessarily designed to be used in production applications. For products designed to be used in production programs, please consult the factory.

KULITE SEMICONDUCTOR PRODUCTS, INC. • One Willow Tree Road • Leonia, New Jersey 07605 • Tel: 201 461-0900 • Fax: 201 461-0990 • http://www.kulite.com